TRIPLE ECCENTRIC BUTTERFLY VALVE, AJ PRIMARY H2

Metal seated, DN 100-1500, PN10-PN250/ASME cl.150-ASME cl.1500

985/014-000, 985/024-000, 985/034-000, 985/044-000, 985/054-000

Gas Supply **Energy** **Chemical Processing** **Oil and Gas**

Triple eccentric butterfly valve, metal seated, available in Wafer, Lug, Flanged short pattern, Flanged long pattern and Buttwelded ends. Different body, disc and seal materials are available and specifically evaluated for hydrogen service, ensuring reliable performance. The valves are engineered with an advanced triple-eccentric geometry to ensure precise, low-torque operation even in demanding applications. The internal design features smooth, streamlined geometries without sharp edges, optimised for hydrogen service. The metal-to-metal sealing system provides reliable tightness with minimal wear and exceptional durability throughout the valve's service life. Dedicated material and hydrogen testing validate performance for high-pressure H_2 applications, with bi-directional isolation and control capability.

Product description:
AJ Primary triple eccentric butterfly valve for a large variety of service conditions and applications with pressures up to 260 bar and temperatures from -60 °C to 450 °C.

Standards:
- Design Standards: API 609 Cat. B, EN 593, ASME B16.34, EN12516, ASME B31.12
- Face-to-face dimensions according to: API 609, EN 558, ISO 5752, ASME B16.10
- Flange drilling according to: ASME B16.5, ASME B16.47, EN1092-1, ISO 7005
- Buttwelded ends according to: ASME B16.25

Tests/Approvals:
- Testing: API 598, ISO 5208, EN 12266-1, IEC 60534-4, ISO 15848-2, API 6D Appendix M
- API 609 MONOGRAM
- Fire tested to: API 607, ISO 10497
- Compliance with: Pressure Equipment Directive 2014/68/EU, ATEX Directive 2014/34/EU
- SIL assessment: according to IEC 61508 (PFD values up to the SIL 3 range with full and partial stroking test)
- Fugitive Emissions: ISO 15848-1, IOGP S-562 & IOGP S-611, API 641
- For Chinese market: SELO licence for the quality system, TSG for Primary and Cryogenic configurations

Features:
- Triple eccentric, friction-free sealing geometry minimizing wear on metal sealing surfaces
- Cavity-free body design preventing media entrapment
- Bi-directional or uni-directional tight shut-off capability
- Streamlined flow path engineered for high Cv and reduced pressure loss
- One-piece, high-strength stem for precise disc alignment
- Solid metal seal ring configurations for demanding temperature and pressure conditions
- Integral anti-blowout stem system
- Low fugitive-emission packing system
- Intrinsically fire-safe design
- Intrinsically antistatic construction ensuring safe operation in potentially explosive atmospheres
- Special executions include NACE-compliant materials, CRA overlay, FBE internal coating, quick-acting and high-cycle configurations, and optional stem extensions

Accessories:
Gearbox, pneumatic, hydraulic and electric actuators, position indicators, solenoid valves, positioners

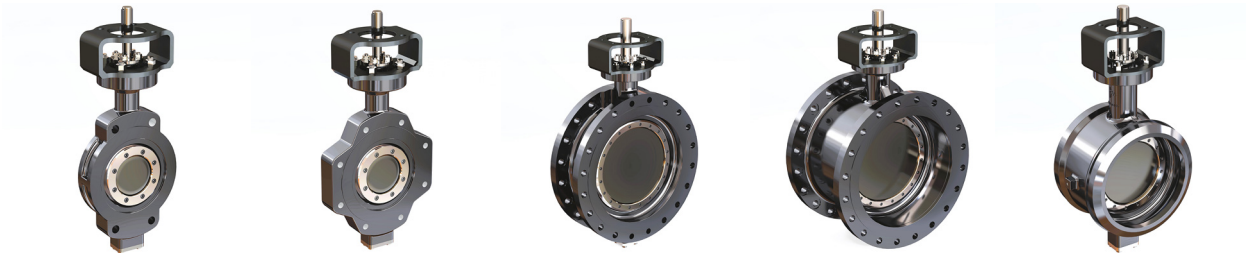

Wafer
STV 985/014-000

Lug
STV 985/024-000

Flanged short pattern
STV 985/034-000

Flanged long pattern
STV 985/044-000

Buttwelded ends
STV 985/054-000

SIL

CE

The designs, materials and specifications shown are subject to change without notice. This is due to the continuous development of our product programme.

©2026 AVK GROUP A/S

TRIPLE ECCENTRIC BUTTERFLY VALVE, AJ PRIMARY H2

Metal seated, DN 100-1500, PN10-PN250/ASME cl.150-ASME cl.1500

985/014-000, 985/024-000, 985/034-000, 985/044-000, 985/054-000

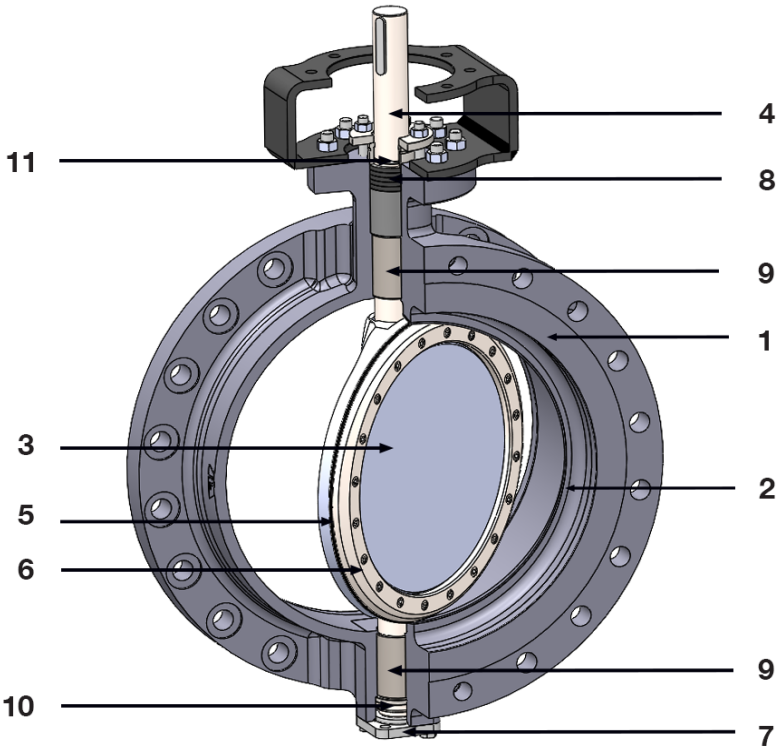

Components:

1. Body	Carbon steel Stainless steel Alloy steel Duplex / Super Duplex Nickel alloy (Inconel 625) Super austenitic stainless steel	7. Bottom cover	see body materials
2. Seat	Hard facing: ErCoCr-E	8. Packing	Graphite with reinforcement (Stainless steel or Inconel)
3. Disc	see body materials	9. Radial bearings	Stainless steel Super Duplex Hastelloy
4. Shaft	Martensitic stainless steel Austenitic stainless steel Duplex / Super Duplex Nickel alloy Super austenitic stainless steel	10. Axial bearing	see radial bearings
5. Seal ring (solid)	Stainless steel Super Duplex Nickel alloy (Inconel 625)	11. Anti-blowout gland	Stainless steel Super Duplex
6. Disc flange (Retaining ring)	see body materials		

The designs, materials and specifications shown are subject to change without notice. This is due to the continuous development of our product programme.

©2026 AVK GROUP A/S