DESPONIA® plus - Butterfly valve Sizes 1“ to 24“

Description

Centric butterfly valve with elastomer liner for liquids and gases in the industrial range, general services, water treatment, ...

Product features

• Body construction	DP1 Wafer Sizes 1” to 24” DP3 Lug Sizes 2” to 24”
• Face to face dimension	according to ISO 5752/20, EN 558-1/20
• Top flange	according to EN ISO 5211
• Max. working pressure	232/290 psi
• Rating	PN 6, PN 10, PN 16, PN 25, ANSI cl. 150
• Temperature range	--40°F to 392°F according to material
• Tightness test	according to EN 12266-1/P12 leakage rate A, test fluid water
CE	The butterfly valves DESPONIA® plus meet the safety requirements of the pressure Equipments Directive 2014/68/UE (PED) appendix 1 for fluids of the groups 1 and 2.
SIL	Butterfly valves DESPONIA® plus are suitable to be operated in safety related systems according to IEC 61508 / 61511, Safety Integrity Level SIL 2

DP1

DP3

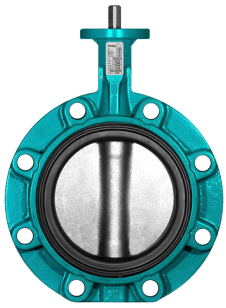

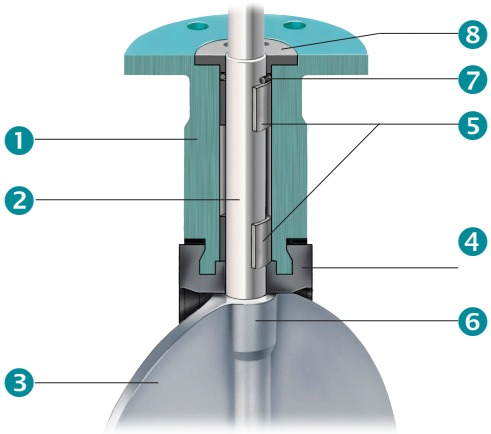

Construction

1	Body (extended valve neck allowing insulation)
2	Blow out proof shaft with position indication
3	Disc
4	Exchangeable liner with sealing grooves on the tightening face
5	Self-lubricating shaft bushing
6	Square driven disc
7	External shaft sealing
8	Retaining washer (blow out protection)

Type code

DP1	100	. 3	3 .	2AE	. 4A	. 2AR	. E	- xx
❶	❷	❸	❹	❺	❻	❼	❽	❾

❶	Body type	DP1	Wafer		Sizes 1“- 24“
		DP3	Lug		Sizes 2“ - 24“
❷	Nominal diameter	025-600	mm		
❸	Working pressure	→	0 = 2,5 bar (36 psi), 1 = 6 bar (87 psi), 2 = 10 bar (145 psi), 3 = 16 bar (232 psi), 4 = 20 bar (290 psi) (with body 3HE or 4C0; 2AE body on request)		
❹	Rating	→	1 = PN 6, 2 = PN 10 , 3 = PN 16 , A = ANSI cl. 150, 5 = PN 25 on request		
❺	Body	2AE	Ductile iron EN-GJS-400-15, Polyurethan coated 80 µ	<284 °F	DP1+DP3, Sizes 1“- 16“
		3HE	Cast steel GP240GH, 1.0619, Polyurethan coated 80 µ on request	<284 °F	DP1 Sizes 2“- 24“, DP3 Sizes 2“- 24“
		4C0	Stainless steel 1.4408, AISI316		DP1 Sizes 2“- 24“, DP3 Sizes 2“- 24“
❻	Shaft	41	Stainless steel 1.4021, AISI420 (max. 232 psi)		Sizes 1“- 12“
		42	Stainless steel 1.4542 / 17-4PH		Sizes 1“- 12“
		4A	Stainless steel 1.4021, AISI420 (max. 232 psi)		Sizes 14“- 24“
		4L	Stainless steel 1.4542 / 17-4PH		Sizes 14“- 24“
❼	Disc	2AR	Ductile iron EN-GJS-400-15, Rilsan coated 250 µm (max. 232 psi)	<194 °F <16 bar	Sizes 1“- 24“
		2AE	Ductile iron EN-GJS-400-15, Polyurethan coated 80 µm (max. 232 psi)	<248 °F	Sizes 1“- 24“
		3HE	Cast steel GP240GH, 1.0619, Polyurethan coated 80 µm	<248 °F	Sizes 10“- 24“ on request
		3OD	Carbon steel 1.0552 / GS52.3, Ultralene Coating™ coated <176 °F, pmax. 145 psi ≤ Size 16“ / 87 psi >Size 16“		Sizes 3“- 12“
		4C0	Stainless steel 1.4408, AISI316		Sizes 1“- 24“
		4CP	Stainless steel 1.4408, AISI316, polished (max. 232 psi)		Sizes 1“- 24“
		4N0	Stainless steel A995 Gr5A		Sizes 1.57“- 24“
		4S0	Super austenitic steel 1.4588		Sizes 1.57“- 24“
		5C0	Alubronze ASTM B148 C95800 / G-Cu Al 10 Ni		Sizes 1“- 24“
		7H0	Hastelloy ASTM A494 CW-12MW (max. 232 psi)		Sizes 1.57“- 24“
❽	Liner	→	E = EPDM <203 °F	EC = EPDM HT <266°F	V = FPM (Viton®) <392 °F < 232 psi
			NG = Nitril (NBR Gas) <194 °F	S = MVQ (Silicone) <392 °F < 87 psi	
			Other materials and white and blue liners (FDA & EC 1935/2004) on request		
❾	Special execution	BL	Vulcanized bonded liners on request		

Max. pressure and temperature limits of application are dependent of the working conditions.

InterApp®

When mounting the valve at the end of a line please note:

- Body type	**DP3**
- Medium	only for liquids, 50÷86 ºF
- Max. working pressure	Sizes 1“- 8“ 145 psi
(with 232 psi disc)	Sizes 10“- 24“ 87 psi
- no water hammer !!!	
please consult our document “Flanges”	

Member of the AVK Group

Dimensions

DP1 Wafer, Sizes 1“ to 24“

Sizes 1“/1¼“ Sizes 1½“/2“/2 ½“ Sizes 3“/4“

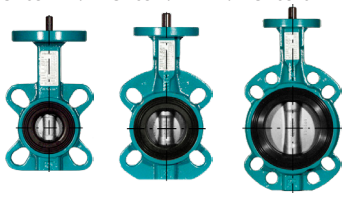

Sizes 10“ - 16“ Sizes 18“ - 24“

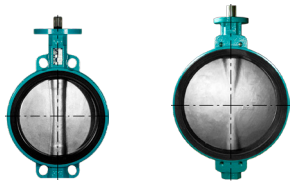

Sizes 5“/6“/8“

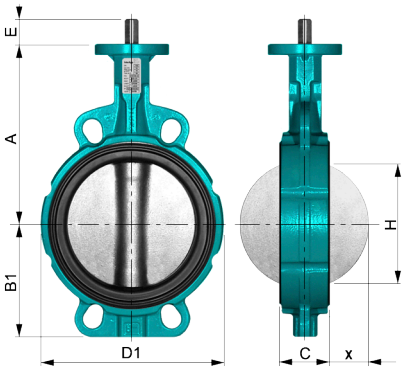

Inch	A	B1	C	D1	E	H*	x*	[lb]
1¼	4.33	2.01	1.18	3.98	0.47	0.75	0.12	3.09
1½	5.12	2.13	1.30	4.25	0.47	1.10	0.24	4.41
2	5.31	2.83	1.69	4.72	0.47	1.26	0.24	6.61
2 ½	5.91	3.23	1.81	5.28	0.47	1.97	0.43	7.94
3	6.30	3.62	1.81	5.59	0.47	2.72	0.75	8.82
4	7.09	4.33	2.05	6.54	0.47	3.46	1.02	12.13
5	7.68	5.04	2.20	7.44	0.63	4.53	1.42	16.53
6	8.27	5.55	2.20	8.43	0.63	5.55	1.89	18.96
8	9.45	6.85	2.36	10.63	0.75	7.64	2.83	28.00
10	10.98	7.91	2.68	12.76	0.94	9.45	3.58	48.94
12	12.40	9.21	3.07	14.88	0.94	11.42	4.41	67.90
14	12.99	10.55	3.15	16.73	1.57	12.99	5.12	91.49
16	14.37	11.77	4.02	18.70	1.57	14.84	5.71	126.10
18	15.63	13.98	4.45	21.18	2.56	16.73	6.46	209.44
20	17.20	15.47	4.96	23.43	2.56	18.66	7.17	264.55
24	20.55	18.27	6.02	27.36	3.15	22.40	8.58	396.83

*** When using plastic stubs please check dimension H/x to avoid disc damaging**

DP3 LUG body, Sizes 2“ to 24“

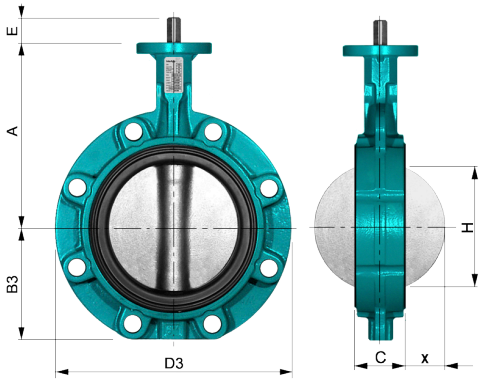

Inch	A	B3	C	D3	E	H*	x*	[lb]
2	5.31	2.83	1.69	4.57	0.47	1.26	0.24	7.05
2 ½	5.91	3.23	1.81	5.16	0.47	1.97	0.43	8.82
3	6.30	3.46	1.81	7.40	0.47	2.72	0.75	13.45
4	7.09	4.02	2.05	8.62	0.47	3.46	1.02	18.74
5	7.68	4.57	2.20	9.76	0.63	4.53	1.42	22.05
6	8.27	5.04	2.20	10.79	0.63	5.55	1.89	24.25
8	9.45	6.34	2.36	13.07	0.75	7.64	2.83	43.21
10	10.98	7.83	2.68	15.83	0.94	9.45	3.58	63.27
12	12.40	9.21	3.07	18.58	0.94	11.42	4.41	90.83
14	12.99	10.16	3.15	20.47	1.57	12.99	5.12	136.69
16	14.37	11.42	4.02	22.99	1.57	14.84	5.71	165.35
18	15.63	13.98	4.45	25.79	2.56	16.73	6.46	315.26
20	17.20	15.51	4.96	28.03	2.56	18.66	7.17	343.92
24	20.55	18.27	6.02	32.64	3.15	22.40	8.58	529.11

Top flange according to EN ISO 5211

Sizes 1“ - 16“

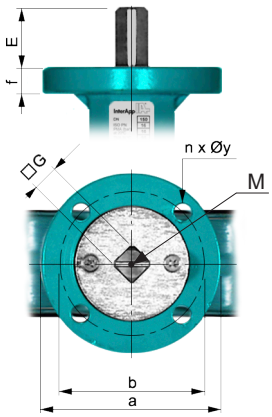

Sizes 18“ - 24“

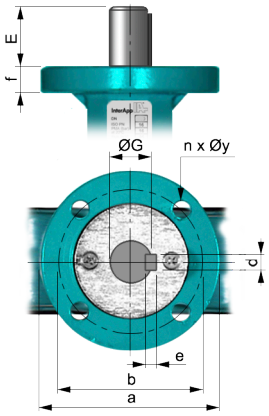

Inch	E	G	M	d	e	f	ISO	a	b	n x øy
1¼	0.47	□ 0.31	M4	-	-	0.47	F07	3.54	2.76	4 x 0.35
1½	0.47	□ 0.31	M4	-	-	0.47	F07	3.54	2.76	4 x 0.35
2	0.47	□ 0.43	M6	-	-	0.47	F07	3.54	2.76	4 x 0.35
2 ½	0.47	□ 0.43	M6	-	-	0.47	F07	3.54	2.76	4 x 0.35
3	0.47	□ 0.43	M6	-	-	0.47	F07	3.54	2.76	4 x 0.35
4	0.47	□ 0.43	M6	-	-	0.47	F07	3.54	2.76	4 x 0.35
5	0.63	□ 0.55	M6	-	-	0.47	F07	3.54	2.76	4 x 0.35
6	0.63	□ 0.55	M6	-	-	0.47	F07	3.54	2.76	4 x 0.35
8	0.75	□ 0.67	M6	-	-	0.47	F07	3.54	2.76	4 x 0.35
10	0.94	□ 0.87	-	-	-	0.71	F10/F12	6.10	4.02/4.92	4 x 0.39/4 x 0.51
12	0.94	□ 0.87	-	-	-	0.71	F10/F12	6.10	4.02/4.92	4 x 0.39/4 x 0.51
14	1.57	□ 0.87	-	-	-	0.71	F12	6.10	4.92	4 x 0.51
16	1.57	□ 1.06	-	-	-	0.71	F12	6.10	4.92	4 x 0.51
18	2.56	ø 1.77	-	0.55	0.35	0.98	F14	6.89	5.51	4 x 0.71
20	2.56	ø 1.77	-	0.55	0.35	0.98	F14	6.89	5.51	4 x 0.71
24	3.15	ø 2.76	-	0.79	0.47	0.98	F16	8.66	6.50	4 x 0.87

Dimensions

Handlever

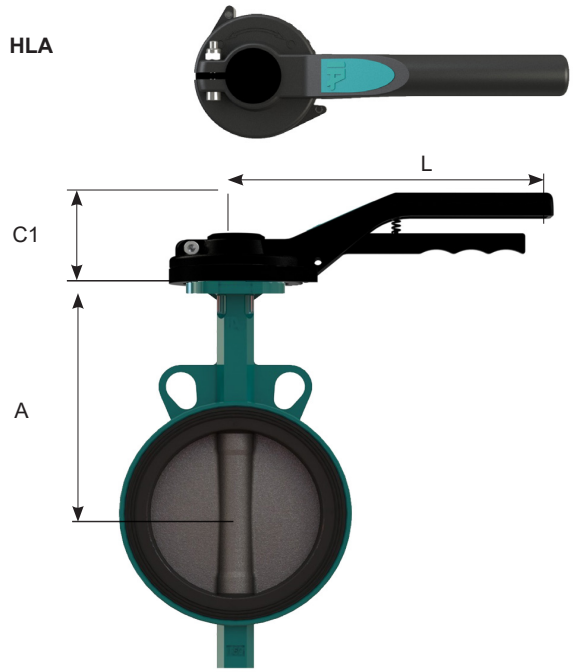

Aluminium, Epoxy coated

Inch	Handlever type	A	C1	L	[kg]
1¼	**HLA.F0708.210-C1**	4.7	2.4	8.3	0.4
1½		5.4	2.4	8.3	0.4
2	**HLA.F0711.210-C1**	5.6	2.4	8.3	0.4
2 ½		6.2	2.4	8.3	0.4
3	**HLA.F0711.340-C1**	6.6	2.4	13	0.4
4		7.2	2.6	13	0.7
5	**HLA.F0714.340-C1**	7.8	2.6	13	0.7
6		8.4	2.6	13	0.7
8	**HLA.F0717.340-C1**	9.6	2.6	13	0.7

1) Consideration for 4 Inch
- In general, 4 inch should be used with 340 handlever (HLA.F0711.340-C1).
- In cases where a 4 inch with 210 handlever (HLA.F7011.210-C1) is required, it can be done only for not severe conditions.
  If the 340 size is not possible to be used while working in severe conditions, it is recommended to use a gearbox
  (i.e GB232-05.F05-F0711.100).

2) General consideration for big sizes (5 inch - 8 inch)
- 5 inch and 6 inch PN 16 for severe conditions are recommended to use with a gearbox.
- 8 inch PN 6 - PN10 for normal conditions are recommended to use with a gearbox.
- 8 inch for severe conditions and 8 inch PN16 for normal conditions must be used with a gearbox.

Further documentation

Pneumatic actuators, Electric actuators, Accessories according separate data sheets.
Installation guide, Maintenance guide, Flanges: Please consult these guides for the installation and maintenance of our butterfly valves.

The technical data are noncommittal and do not assure you of any properties. Please refer to our general sales conditions. Modifications without notice.
© 2024 InterApp AG, all rights reserved